CUSTOMER :

NO. : MKM-
EDIT :
DATE :

SPECIFICATION FOR APPROVAL

PRODUCT : 0.4" Thiple-Digit 7-Segment Numeric Display

MODEL NO. MD-430D/437D

APPROVAL			REVISION
CHK	CHK	APPD.	
REMARKS			

MIKWANG ELECTRONICS CO., LTD.
RM1401, 60-24,GASAN-DONG, GEUMCHEON-GU, SEOUL, KOREA
TEL : 82-2-2113-7700(Rep.) FAX : 82-2-2113-7707
URL : WWW.LED.CO.KR / E-MAIL : mkled7700@hanmail.net

MIKWANG ELECTRONICS MD-430D/437D

0.4" Triple-Digit 7-Segment Numeric Display

GENERAL DESCRIPTION

The MD-430D and the MD-437series are high performance epoxy resin molded 3-digit 7-segment LED displays for an application which space is at a premium. The character height is approximately 0.4-inch(10mm) and available in red, green, orange and yellow-green emitting colors.

The standard units are constructed with black face and milky white segment color.

PACKAGE DIMENSION

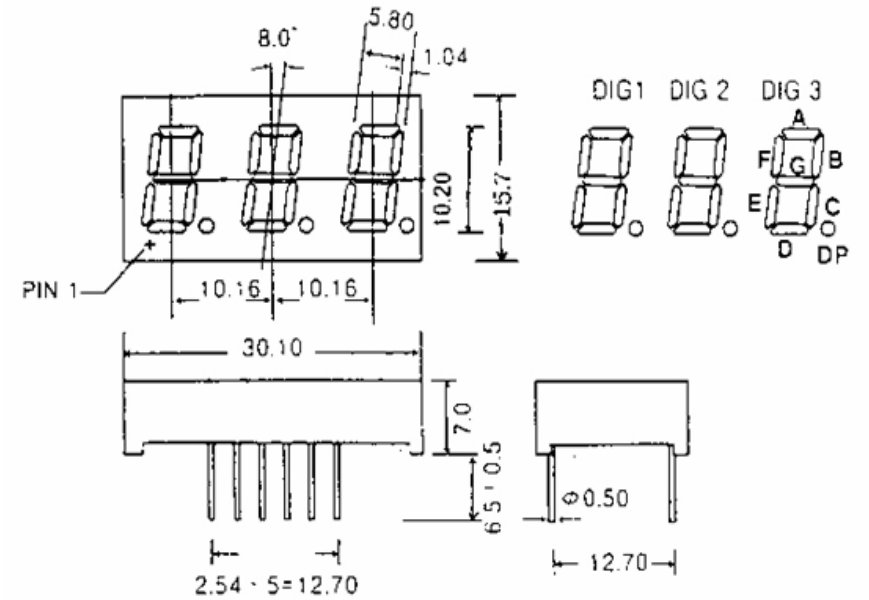

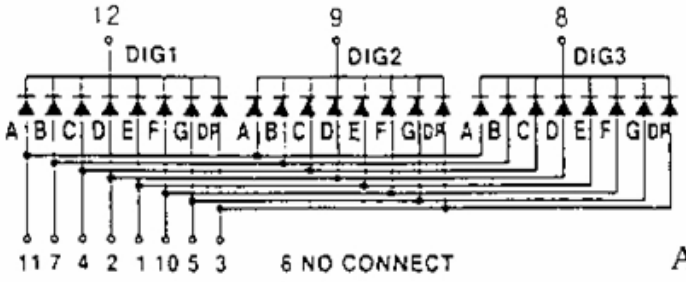

Anode Common(MD-437D)

Cathode Common(MD-430D)

All diodes are reversed polarity

MIKWANG ELECTRONICS CO., LTD.

Rm1401,World Merdian Venture Center, #60-24, Gasan-dong, Geumcheon-gu, Seoul, Korea
TEL +82-2-2113-7700/ FAX +82-2-2113-7707 www.LED.co.kr

MIKWANG ELECTRONICS MD-430D/437D

◆ Super Red MD-SR430D/437D(AlGaAs/GaAs)

Absolute Maximum Ratings(Ta=25℃)

Power dissipation/total	960	mW
Power dissipation/seg	40	mW
Forward current	20	mA
Peak forward current	60	mA
Reverse voltage	5	V
Operating temperature	−25~+85	℃
Stroage temperature	−55~+100	℃

Electrical/Optical Characteristics(Ta=25℃)

Parameter	Symbol	Condition	Min	Typ	Max	Unit
Forward voltage/seg	Vf	If=10mA	−	1.8	2.0	V
Reverse current/seg	Ir	Vr=5V	−	−	10	μA
Luminous intensity/digit	Iv	If=10mA	700	1500	−	μcd
Peak wave length	λp	If=10mA	−	660	−	nm
Spectral line half width	△λ	If=10mA	−	20	−	nm

◆ Green MD-G430D/437D(GaP)

Absolute Maximum Ratings(Ta=25℃)

Power dissipation/total	1,152	mW
Power dissipation/seg	48	mW
Forward current	20	mA
Peak forward current	60	mA
Reverse voltage	5	V
Operating temperature	−25~+85	℃
Stroage temperature	−55~+100	℃

Electrical/Optical Characteristics(Ta=25℃)

Parameter	Symbol	Condition	Min	Typ	Max	Unit
Forward voltage/seg	Vf	If=10mA	−	2.2	2.4	V
Reverse current/seg	Ir	Vr=5V	−	−	10	μA
Luminous intensity/digit	Iv	If=10mA	350	900	−	μcd
Peak wave length	λp	If=10mA	−	570	−	nm
Spectral line half width	△λ	If=10mA	−	30	−	nm

◆ Pulse Width − 1ms
Duty Cycle − 1/5